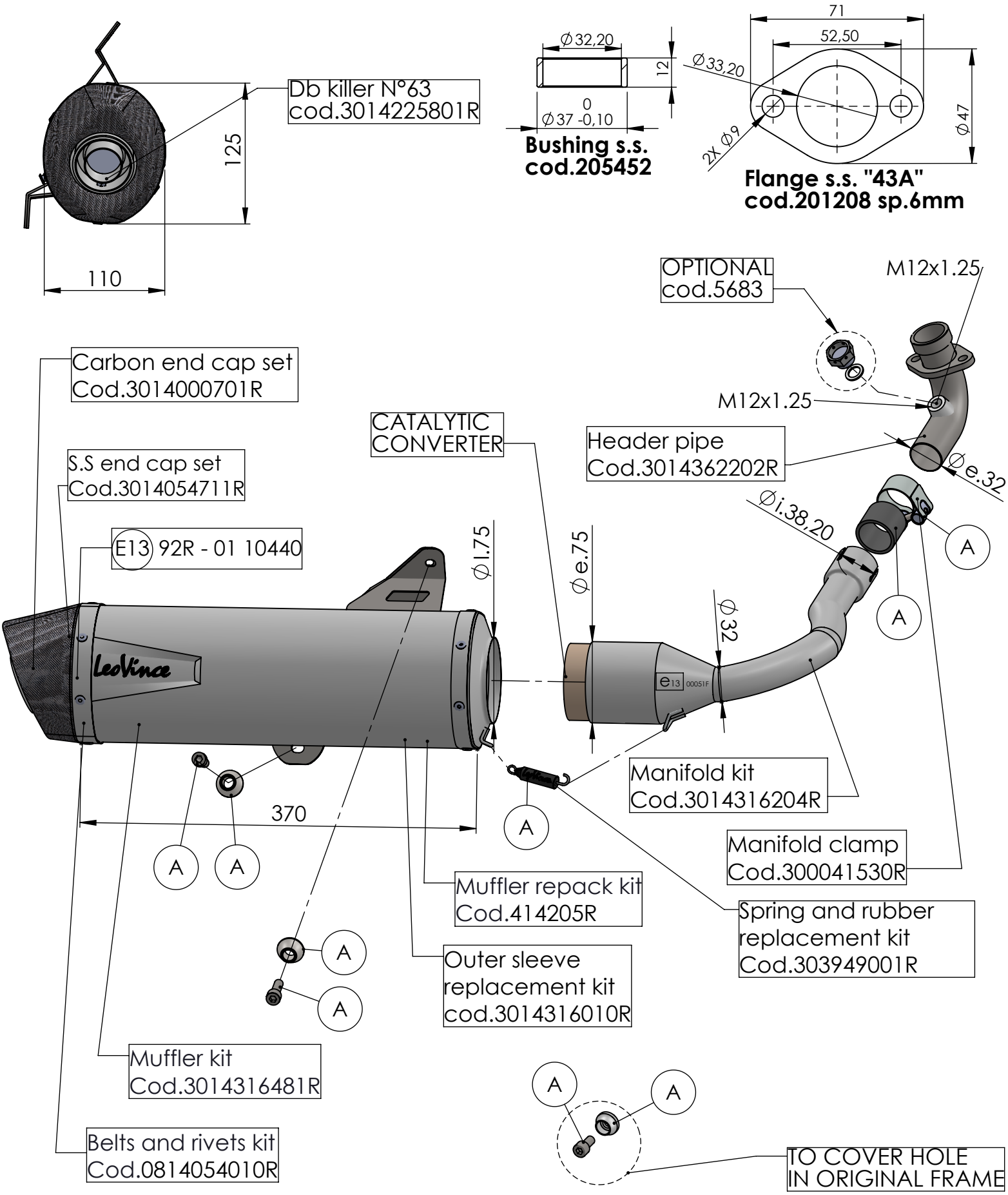

ART. 14362EK SPARE PARTS

VESPA GTS 300 HPE / RACING SIXTIES / SUPER / SEI GIORNI / SPORT / TECH / TOURING

(A) FITTING KIT Cod. 3014316601R